	Model No.	Finshed			
	3423100				





Laundry trolley

-Polished stainless steel tubular constuction
-Four inch wheels,two with break
-Knock-down construction easy for storage and transport
"I"leg design more steady
-Finish is available brushed stainless steel

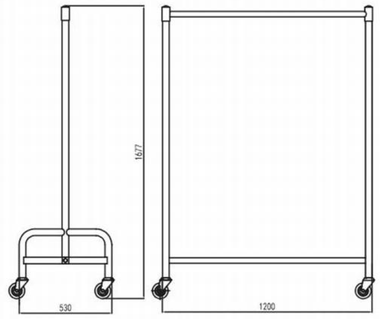

	Model No.	Finshed			
	3422100				



Laundry trolley

-Polished stainless steel tubular constuction
-Four inch wheels,two with break
-Knock-down construction easy for storage and transport
"S"leg design can stackable saving the space
-Finish is available brushed stainless steel

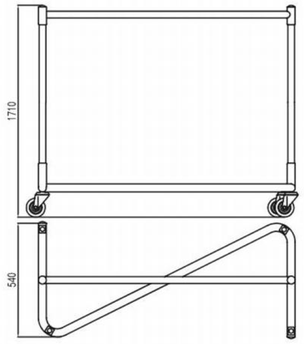



	Model No.	Finshed			
	3427200				





Laundry trolley

-Paint steel tubular constuction
-Four inch wheels,two with break
-Knock-down construction easy for storage and transport
-Finish is available brushed stainless steel

	Model No.	Finshed			
	3531111				



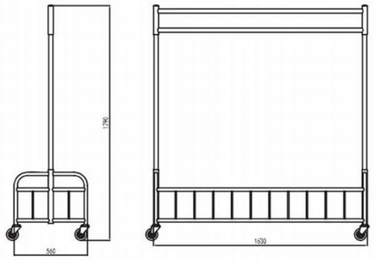

Laundry trolley

-Polished stainless steel tubular constuction
-Four inch wheels,two with break
-Knock-down construction easy for storage and transport
-Finish is available brushed stainless steel



	Model No.	Finshed			
	LYITH-C132				



LYITH-C132
Clothes delivery truck
CLOTHES TROLLEY
SIZE:(L)1250X(W)650X(H)1730mm

	Model No.	Finshed			
	LYITH-C133				



LYITH-C133
Clothes delivery truck
CLOTHES TROLLEY
SIZE:(L)1170X(W)550X(H)1900mm

LOBBY / RECEPTION /FRONT OFFICE

	Model No.	Finshed			
	LYITH-Y01				



LYITH-Y01
Luxurious floor-standing clothes rack in guest room
RECTANGLE DOUBLE BIN
SIZE:(L)580X(W)335X(H)1700

	Model No.	Finshed			
	LYITH-Y03				



LYITH-Y03
Luxurious floor-standing clothes rack in guest room
RECTANGLE DOUBLE BIN
SIZE:(L)300X(W)470X(H)1240



	Model No.	Finshed		
Titanium gold	3332200	Titanium gold		
polishes	3332100	Polish		
Brushed	3332400	Brush		





Luggage rack

-Constructed out of durable stainless steel tube.

-These racks are offered in several sizes,with or without bumpered back bar and are available in polished, brushed,gold black, hammerstoned finishes.

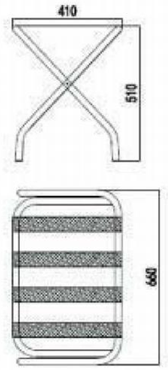

	Model No.	Finshed		
Titanium gold	3321200	Titanium gold		
polishes	3321100	Polish		
black	3321400	Black		





Luggage rack

-Constructed out of durable stainless steel tube.

-These racks are offered in several sizes,with or without bumpered back bar and are available in polished,brushed,gold black, finishes.

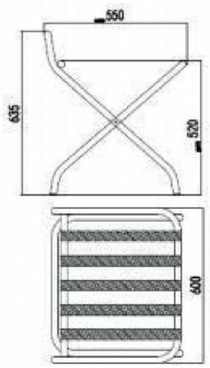

In room

	Model No.	Finshed		
Titanium gold	3333200	Titanium gold		
Polishes	3333500	Polish		
Polishes	3333400	Black		





Luggage rack

-Constructed out of durable stainless steel tube.
-These racks are offered in several sizes,with or without bumpered back bar and are available in polished, brushed,gold black, hammerstoned finishes.

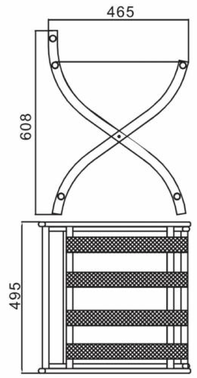

	Model No.	Finshed		
Titanium gold	3338200	Titanium gold		
Polishes	3338100	Polish		
Brushed	3338400	Brush		



Luggage rack

-stainless steel 201,with 6pcs straps ,
-size:600*400*500mm

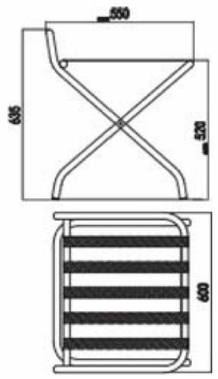

In room

	Model No.	Finshed		
Titanium gold	3315200	Titanium gold		
Polishes	3315500	Polish		
Brushed	3315400	Brush		





Luggage rack

-Constructed out of durable stainless steel tube.
-These racks are offered in several sizes,with or without bumpered back bar and are available in polished, brushed,gold black, hammerstoned finishes.

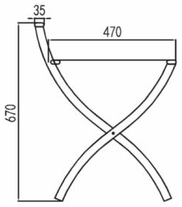

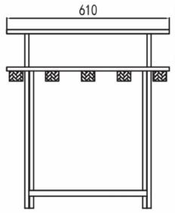

	Model No.	Finshed		
Titanium gold	3314200	Titanium gold		
Polishes	3314500	Polish		
Brushed	3314400	Brush		





Luggage rack

-Constructed out of durable stainless steel tube.
-These racks are offered in several sizes,with or without bumpered back bar and are available in polished, brushed,gold black, finishes.

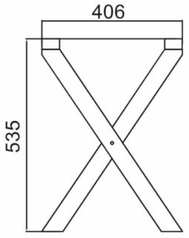

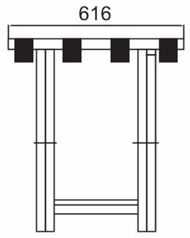

	Model No.	Finshed		
Titanium gold	3337200	Titanium gold		
polishes	3337100	Polish		
Brushed	3337400	Brush		



Luggage rack

. stainless steel 201,with 5pcs straps,
. size:470*400*500MM

In room

	Model No.	Finshed		
Titanium gold	3336200	Titanium gold		
polishes	3336100	Polish		
Brushed	3336400	Brush		



Luggage rack

. stainless steel 201,with 5pcs straps,
. size:670*510*690MM

	Model No.	Finshed		
Titanium gold		Titanium gold		
polishes		Polish		
Brushed		Brush		



Luggage rack

. stainless steel 201, with 5pcs PUstraps ,
. size: 520*430*460 mm,

	Model No.	Finshed		
Titanium gold	HLLR-511	Titanium gold		
		Bronze		
		Sliver		





Luggage rack

. stainless steel 304 , with 3pcs PUstraps ,
. size: 500*530*550 mm,



	Model No.	Finshed		
	HLLR-311	original		
	HLLR-312	dark		

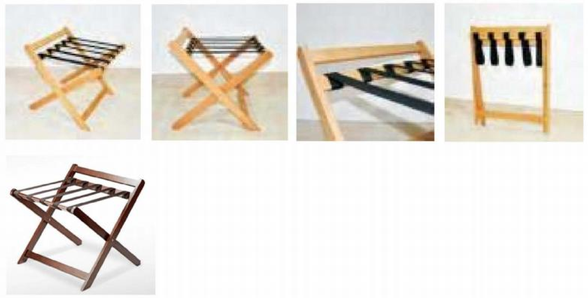

Luggage rack

. Solid beech wood material
• Five strong straps to carry sufficient weight
• Flat when folded up
• Finished original color
• Open size:600x630x600(H)mm
• material size:50x20mm

	Model No.	Finshed		
	3311200	dark brown		



Luggage rack

. Solid beech wood material
• Five strong straps to carry sufficient weight
• Flat when folded up
• Finished dark brown color
• Open size:600x440x670(H)mm

In room

	Model No.	Finshed		
	HLLR-201	black		



Luggage rack

. Solid WPC
(wood plastic composite) material
• Five strong straps to carry sufficient weight
• Flat when folded up
• Available in two standard colours
• Open size:600x590x530(H)mm
• material size:50x25mm

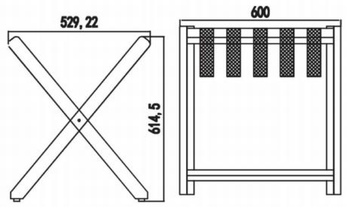

	Model No.	Finshed		
	3312300	brown		



Luggage rack

. Solid wood material
• Three strong straps to carry sufficient weight
• Flat when folded up
• Open size:600x400x560(H)mm



LOBBY / RECEPTION
/FRONT OFFICE



LaiCozy

	Model No.	Finshed			kg
Titanium gold	2202313	Titanium gold	350		11.5
polishes	2202111	Polishes	350		11.5
Brushed	2202212	Brushed	350		11.5

Stanchion post

-polished stainless steel construction with “Leg”design
-350mm round base
-Size: ¢ 350*920Hmm

Hooks Dia optional in: ¢ 32mm, ¢ 38mm
Hooks finish optional in:polished brushed and gold;
Rope color optional in:red, blue, balck, brown
Length optionalin:1.5m,2.0m and 2.5m

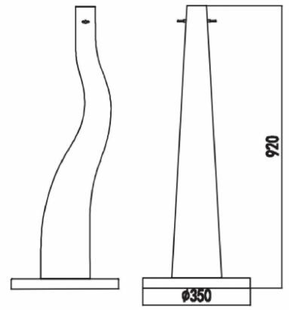



	Model No.	Finshed			kg
Titanium gold	2221313	Titanium gold	320	50	7.6
polishes	2221111	Polishes	320	50	7.6
Brushed	2221212	Brushed	320	50	7.6
Black	2221412	black paint	320	50	7.6



Stanchion post

-Tilanium gold finish construction
-Zylinder final
-320mm taper base
-Size: ¢ 320*940H)mm

Hooks Dia optional in: ¢ 32mm, ¢ 38mm
Hooks finish optional in:polished brushed and gold;
Rope color optional in:red, blue, balck, brown
Length optionalin:1.5m,2.0m and 2.5m

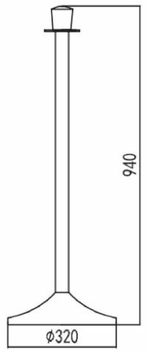





	Model No.	Finshed			kg
Titanium gold	2211313	Titanium gold	320	50	7.6
polishes	2211111	Polishes	320	50	7.6
Brushed	2211212	Brushed	320	50	7.6
Black	2211412	black paint	320	50	7.6



Stanchion post

-Polished stainless steel construction
-Ball final
-320mm taper base
-Size: ¢ 320*987(H)mm

Hooks Dia optional in: ¢ 32mm, ¢ 38mm
Hooks finish optional in:polished
brushed and gold;
Rope color optional in:red, blue, balck, brown
Length optionalin:1.5m,2.0m and 2.5m

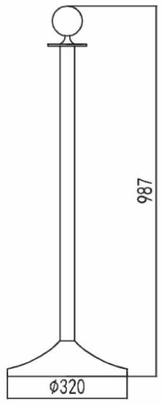



	Model No.	Finshed			kg
Titanium gold	2224313	Titanium gold	360	50	9.8
polishes	2224111	Polishes	360	50	9.8



Stanchion post

-Polished stainless steel construction
-Flat final
-U style 360mm flat base
-Size: ¢ 360*930(H)mm

Hooks Dia optional in: ¢ 32mm, ¢ 38mm
Hooks finish optional in:polished
brushed and gold;
Rope color optional in:red, blue, balck, brown
Length optionalin:1.5m,2.0m and 2.5m

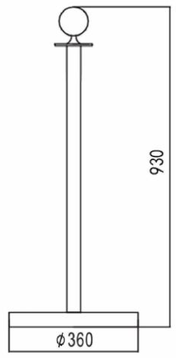

LOBBY / RECEPTION /FRONT OFFICE

	Model No.	Finshed			kg
Titanium gold	2224313	Titanium gold	360	50	9.8
polishes	2224111	Polishes	360	50	9.8



Stanchion post

-Polished stainless steel construction
-Flat final
-U style 360mm flat base
-Size: ¢ 360*930(H)mm

Hooks Dia optional in: ¢ 32mm, ¢ 38mm
Hooks finish optional in:polished
brushed and gold;
Rope color optional in:red, blue, balck, brown
Length optionalin:1.5m,2.0m and 2.5m

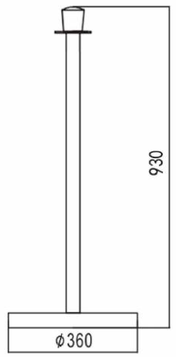



	Model No.	Finshed			kg
Titanium gold	2286313	Titanium gold	360	50	10
polishes	2286111	Polishes	360	50	10
Brushed	2286212	Brushed	360	50	10
Black	2286412	black paint	360	50	10



Stanchion post

-Polished stainless steel construction
-Drum final
-360mm flat base
-Size: ¢ 360*960(H)mm

Hooks Dia optional in: ¢ 32mm, ¢ 38mm
Hooks finish optional in:polished
brushed and gold;
Rope color optional in:red, blue, balck, brown
Length optionalin:1.5m,2.0m and 2.5m

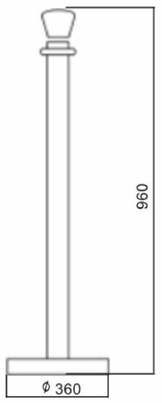



LaiCozy
Hotel Furniture And Equipment

A4

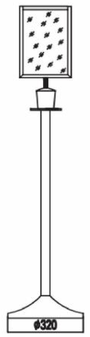



	A4	A3	A4	A3
Titanium gold	2203	2205	2203-1	2205-1
polishes	2201	2204	2201-1	2204-1
Brushed	2202	2206	2202-1	2206-1

A3

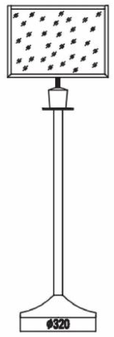



	A4	A3	A4	A3
Titanium gold	2603	2605	2603-1	2605-1
polishes	2601	2604	2601-1	2604-1
Brushed	2602	2606	2602-1	2606-1

	Red	Blue	Gold	Black
Titanium gold	2323121	2323122	2323123	2323125
polishes	2321121	2321122	2321123	2321125
Brushed	2322121	2322122	2322123	2322125

Design your Poly rope

-Dia opitonal in: ¢ 32mm, ¢ 38mm;
-Hooks finish optional in:polished, brushed and gold;
-Rope color optional in:red,blue,gold, black, brown
-Length optional in:1.5m,2.0m,2.5m .



LaiCozy
Hotel Furniture And Equipment

LOBBY / RECEPTION /FRONT OFFICE

	Red	Blue	Black	Fresh red
Titanium gold	2323111	2323112	2323115	2323116
polishes	2321111	2321112	2321115	2321116
Brushed	2322111	2322112	2322115	2322116

Design your Velour rope

-Dia opitonal in: ¢ 32mm, ¢ 38mm;
-Hooks finish optional in:polished, brushed and gold;
-Rope color optional in:red, blue,fresh red, black, brown
-Length optional in:1.5m,2.0m,2.5m .





	Model No.	Finshed			kg
	2215	polished	320	50	7.6





Barrier banner

Size:1400X800(mm)
Fabric color are opional in:
Black, red, blue and green



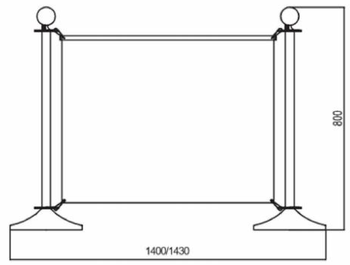



	Red	Blue	Yellow	Black	Green	Gray
Polishes	2423111	2423112	2423113	2423115	2423114	2423119
Black	2423411	2423412	2423413	2423415	2423414	2422419





Retractable post

-73mm Aluminum tube in polished finish
-With 2m retractable belt in red color
-360 taper base
Size: ¢ 360* 1040 (H) mm
Belt length are availablel in 3m
Red, blue, yellow, green, gray and black

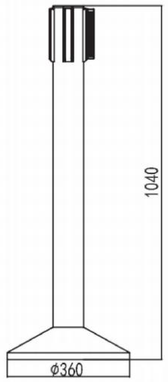

	Red	Blue	Yellow	Black	Green	Gray
Titanium gold	2445311	2445312	2445313	2445315	2445314	2445319
Polishes	2445111	2445112	2445113	2445115	2445114	2445119
Brushed	2445211	2445212	2445213	2445215	2445214	2445219
Black	244541	2445412	2445413	2445415	2445414	2445419





Retractable post

-50mm stainless steel tube in polished finish
- ¢ 63mm stainless steel removable belt head
-With 2m retractable belt in red color
-320 taper base
Size: ¢ 320*985 (H) mm
Belt length are availablel in 3m
Red, blue, yellow, green, gray and black

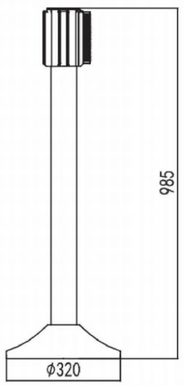

LOBBY / RECEPTION /FRONT OFFICE





	Red	Blue	Yellow	Black	Green	Gray
Titanium gold	2432311	2432312	2432313	2432315	2432314	2432319
Polishes	2432111	2432112	2432113	2432115	2432114	2432119
Brushed	2432211	2432212	2432213	2432215	2432214	2432219





Retractable post

-63mm stainless steel tube in polished finish
-With 2m retractable belt in red color
-350 flat base
Size: ¢ 350*935 (H) mm
Red, blue, yellow, green, gray and black

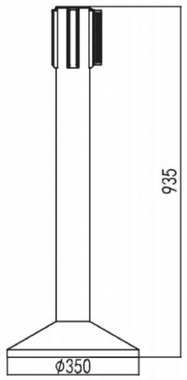

	Model No.	Finshed			
	2140999	Hammerstone			



Post trolley

-Knocked down desing.
-Easy for transport and stock
-Hammerstone finish
Size:1125X800X1930(H)mm

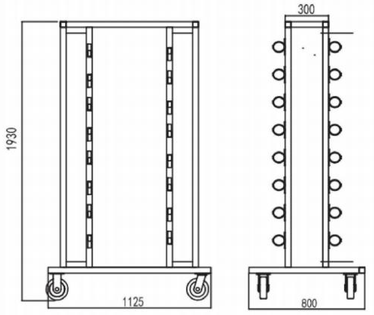



LaiCozy

	Model No.	Finshed			
	2141999	Hammerstone			





Post trolley

-Knocked down design
-Easy for transport and stock
-Hammerstone finish
With PVC piles
Size:1125X800X1930(H)mm

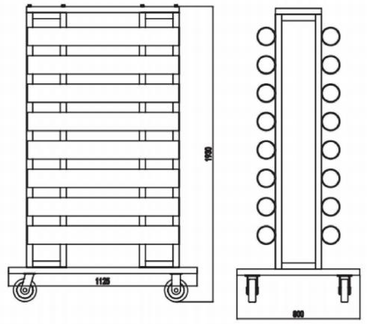

	A4	A3	A4	A3
Titanium gold	2403	2405	2403-1	2405-1
Polishes	2401	2404	2401-1	2404-1
Brushed	2402	2406	2402-1	2406-1

Polished stainless steel sign



A4



A3



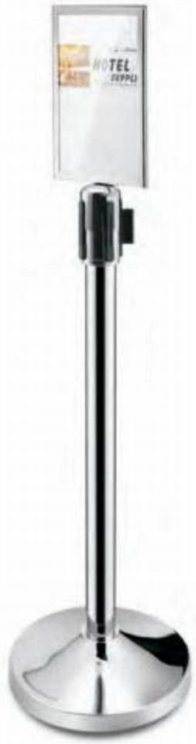

LOBBY / RECEPTION /FRONT OFFICE



	A4	A3	A4	A3
Titanium gold	2413	2415	2413-1	2415-1
Polishes	2411	2414	2411-1	2414-1
Brushed	2412	2416	2412-1	2416-1
Black	2444	2446	2444-1	2446-1







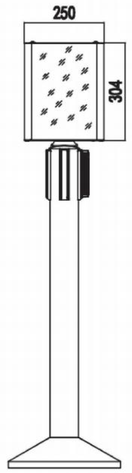

Sign for retractable post

Aluminium frame with
stainless steel holder
Size:250*50*380(H)mm

	Model No.	Finshed			
	3021090-1		345	70	10









Sign board

-Stainless steel, polished finish
Size:450X330X1235(H)mm

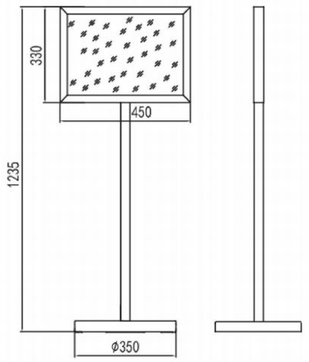



	Model No.	Finshed			
	3021090	Polish			








Sign board

-Stainless steel, polished finish
Size:430X310X1100(H)mm

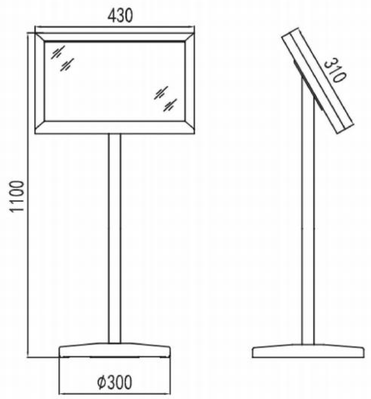

	Model No.	Finshed			
	LK-1204		345	70	10

Vertical advertising player

- Body material:metal plate shell/aluminum alloy frame
- Body color:silver,gold, black
- Surface decorative box:5mm toughened glass
- Packaging materials:honeycomb carton + foam
- Single board HD advertising player(MST6MM18/6M48/V59)
- Androld multimedia information system(A10/A20/A30)
- Multimedia interactice platform(X86/A20/A30)
- Network multimedia release information sytem(X86)

Size:55, 43, 32, 21.5 "



LOBBY / RECEPTION /FRONT OFFICE

	Model No.	Finshed			
	LYTH-P02				



LYTH-P02

Sign stand

Size:540*400*1300(H)mm

	Model No.	Finshed			
	LYTH-P04				



LYTH-P04

Sign stand

Size:430*300*1300(H)mm

	Model No.	Finshed			
	LPX-25	black paint			







Rubbish bin

-Black paint finish

Size:200*200*600 (H) mm

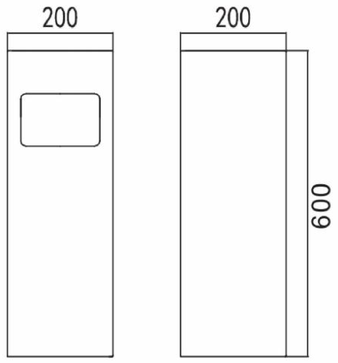

	Model No.	Finshed			
	LPX-19B				



Rubbish bin

-Black paint finish

Size:310*260*655 (H) mm

LOBBY / RECEPTION
/FRONT OFFICE

	Model No.	Finshed			
	LPX-212(17)	Rose gold			







Rubbish bin

Rose gold finish

Size:305*305*625 (H) mm

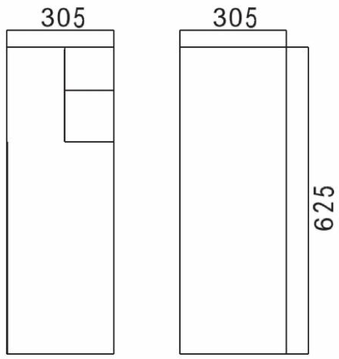

	Model No.	Finshed			
	LPX-86A				



Ashtray with retroflex cover

-Satinless steel

Size:305*305*615 (H) mm

	Model No.				
	LPX-86				



Ashtray with retroflex cover

-Satinless steel

Size:310*250*615(H)mm

	Model No.	Finshed			
	LPX-209E2				



Ash bucket

-Stainless steel

Size: ¢ 320X680(H)mm

LOBBY / RECEPTION /FRONT OFFICE

	Model No.	Finshed			
	LPX-7H				



Luxury bin

-Natural marble with stainless steel top

Size:320*320*755(H)mm

	Model No.				
	LPX-78A3				



New concept ashbin

-With marble top dish

Size:280*220*670(H)mm



	Model No.	Finshed			
	2511122	Satin			

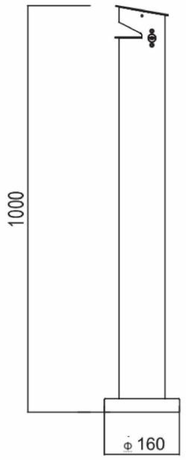

Post ashtray without base

-Satinless stell satin finish
Size: ¢ 160* 1000 (H) mm

	Model No.	Finshed			
	2512122	Satin			

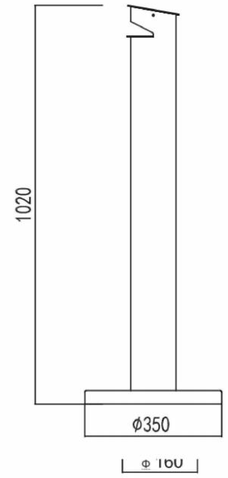

Post ashtray with base

-Satinless stell satin finish
Size: ¢ 350* 1020 (H) mm



LOBBY / RECEPTION /FRONT OFFICE



	Model No.	Finshed			
	LPX-129D-24				

Cigarette butts column

-Satinless steel with champagne color.
Size:220* 180*810 (H) mm

	Model No.	Finshed			
	LYITH-E02				

LYITH-E02
ash column
GROUND ASH BARREL
SIZE:(L)220x(W)180x(H)850



	Model No.	Finshed			
	LYITH-E04				



LYITH-E04
ash column
GROUND ASH BARREL
SIZE:(L)220x(W)180x(H)850

	Model No.	Finshed			
	253111	Polished			





Column bin
-Stainless steel body.
-Polished finish .
Size: ¢ 250*680 (H) mm



LOBBY / RECEPTION /FRONT OFFICE

	Model No.	Finshed			
	LYITH-A14				


A(titanium) B(rose gold)

LYITH-A14
Classified environmentally friendly trash cans
GROUND ASH BARREL
Size:(L)900x(W)450x(H)1000

	Model No.	Finshed			
	LYITH-221				



LYTH-221
Art steel pipe pedestal ashtray
GROUND ASH BARREL
Size:(∮)330x(H)735


A (mirror steel) B(rose gold) C (black gold)

	Model No.	Finshed			



LYITH-E26 LYITH-E28

LYITH-E26
ash column
GROUND ASH BARREL
SIZE:(L)335x(W)310x(H)1195
LYITH-E28
ash column
GROUND ASH BARREL
SIZE:(L)335x(W)310x(H)1195

	Model No.	Finshed			
	LYITH-103				



White

LYITH-103
bullet trash can
BULLET HEAD TRASH CAN
SIZE:(W)310 X(H)810

In room

	Model No.	Finshed			
	LYITH-235				

LYITH-235
Outdoor ashtray bin
RUBBISH BARREL
Size:(L)330x(W)280x(H)890



A(baking paint) B(stainless steel)

	Model No.	Finshed			
	LPX-180				



Waste paper garbage can

-Stainless steel
Size: ¢ 245X605(H)mm

	Model No.	Finshed			
	LXH-B97B				



LHX-B97B
Round steel environmental barrel
ROUND STEELENVIRONMENT DRUM
SIZE: Diameter 250X610

	Model No.	Finshed			
	LYITH-11C				



LYITH-11C
Square side opening
SQUARE SIDE OPENING
SIZE:(L)250X(W)250X(H)680

LOBBY / RECEPTION /FRONT OFFICE

	Model No.	Finshed			
	LYITH-65				



LYITH-65
Hong Kong style trash can (plastic inner barrel)
RUBBISH BARREL
SIZE:(Φ)380X(H)750

	Model No.	Finshed			
	LPX-110AX				



Column bin
Size: ¢380*760(H) mm

	Model No.	Finshed			
	LYITH-69				



LYITH-69
Hong Kong style trash can (plastic inner barrel)
RUBBISH BARREL
SIZE:(Φ)380X(H)750

	Model No.	Finshed			
	LPX-110T				

Stainless steel bin
Size: ¢ 380*750 (H) mm



LOBBY / RECEPTION /FRONT OFFICE

	Model No.	Finshed			
	LYITH-63				



LYITH-63
Hong Kong style trash can (plastic inner barrel)
RUBBISH BARREL
SIZE:(Φ)380X(H)750

	Model No.	Finshed			
	LYITH-64				

LYITH-64
Hong Kong style trash can (plastic inner barrel)
RUBBISH BARREL
SIZE:(Φ)380X(H)750



	Model No.	Finshed			
	LPX-218G				



Classified dustbin

-**Black finish** with stainles steel top

Size:602*321*750 (H) mm

	Model No.	Finshed			
	LPX-218B(03)				



Rubbish bin

-Satin finish

Size:580*280*720 (H) mm



LOBBY / RECEPTION /FRONT OFFICE

	Model No.	Finshed			
	LPX-218E				



Rubbish bin

-Black finish

Size:680*310*735 (H) mm

	Model No.	Finshed			
	LYITH-A05				

LYITH-A05

Classified environmentally friendly trash cans

RUBBISH BARREL

SIZE:(L)580x(W)280x(H)760



	Model No.	Finshed			
	LYITH-A14				



LYITH-A14
Classified environmentally friendly trash cans
GROUND ASH BARREL
Size:(L)900x(W)450x(H)1000

	Model No.	Finshed			
	LYITH-234				

LOBBY / RECEPTION /FRONT OFFICE



LYITH-234
outdoor trash can
GROUND ASH BARREL
Size:(L)450x(W)450x(H)950 single barrel

	Model No.	Finshed			
	LYITH-A45				



LYITH-A45
Classified environmentally friendly trash cans
RUBBISH BARREL
SIZE:(L)1000x(W)400x(H)900

	Model No.	Finshed			
	LYITH-107A				


sand steel


black

LYITH-107A
Classification environment bucket
RECTANGLE DOUBLE BIN
SIZE:(Φ)255X(H)308
3.5L+3.5L+3.5L

	Model No.	Finshed			
	LYITH-107B				



sand steel



black

LYITH-107B
Classification environment bucket
RECTANGLE DOUBLE BIN
SIZE:(Φ)255X(H)3085L+5L

	Model No.	Finshed			
	LYITH-107C				

LOBBY / RECEPTION /FRONT OFFICE

LYITH-107C
Classification environment bucket
RECTANGLE DOUBLE BIN
SIZE:(Φ)225X(H)270
3.5+.3.5L



	Model No.	Finshed			
	LYITH-CX01				





LYITH-CX01
Round double classification guest room bucket
RUBBISH BARREL
SIZE:(Φ)225*(H)270

	Model No.	Finshed			
	LYITH-CX02				



LYITH-CX02
Long double classification guest room bucket
RUBBISH BARREL
SIZE:(L)270X(W)210X(H)288



	Model No.	Finshed			
	LYITH-106				



black

Sand textured steel

LYITH-106
Rectangular multi-layer trash can m barrel
RECTANGLE DOUBLE BIN
SIZE:(L)240X(W)163X(H)290

	Model No.	Finshed			
	LYITH-102				



black

Vibrant orange

LYITH-102
Long guest room bucket (plastic inner bucket)
RUBBISH BARREL
SIZE:(L)260X(W)180X(H)300

	Model No.	Finshed			
	LYITH-8L				



champagne gold

LYITH-8L
Directly put into guest room bucket (8L)
RUBBISH BARREL
SIZE:(L)235X(W)190X(H)330

	Model No.	Finshed			
	LYITH-6L				



Stainless steel

LYITH-6L
Directly put into guest room bucket (6L)
RUBBISH BARREL
SIZE:(L)225X(W)180X(H)300

LOBBY / RECEPTION /FRONT OFFICE

	Model No.	Finshed			
	LYITH-84				



LYITH-84
Push-type trash can
RUBBISH BARREL
SIZE:(L)220X(W)220X(H)320(15L)





LPX-3E-1 LPX-3E-2 LPX-3E-3 LPX-3E-4

Taper guestroom bin

-Stainless steel body with steel inner tan .
plastic ring on the buttom .
Size: ¢ 234X322Hmm





LPX-177A-1 LPX-177A-2 LPX-177A-3

LOBBY / RECEPTION /FRONT OFFICE

Round guestroom bin

-Size: ¢ 250X295Hmm







LPX-205F-1 LPX-205F-2 LPX-205F-3 LPX-205F-4



Round guestroom bin

-Size: ¢ 230X320Hmm





	Model No.	Finshed			
	LYITH-C17				



LYITH-C17
Single layer guest room bucket
ROOM RUBBISH BARREL
SIZE:(Φ)225X(H)270
(Φ)200X(H)300

	Model No.	Finshed			
	LYITH-C18				

LaiCozy

LOBBY / RECEPTION /FRONT OFFICE



LYITH-C18
Double layer guest room barrel
ROOM RUBBISH BARREL
SIZE:(Φ)225X(H)270

	Model No.	Finshed			
	LYITH-85				



LYTH-85
(Φ)245X(H)295(5L)
(Φ)265X(H)295(8L)
(Φ)315X(H)365(12L)
Round pedal trash can
RUBBISH BARREL

	Model No.	Finshed			
	LYITH-105				



LYITH-105
Heightened double-layer guest room barrel
GROUND ASH BARREL
SIZE:(Φ)200X(H)300

	Model No.	Finshed			
	LYITH-10L				



Elegant white

LYITH-10L
Double-layer guest room bucket (plastic inner bucket)
RUBBISH BARREL
SIZE:(D)225X(H)270

	Model No.	Finshed			
	LYITH-11L				

LOBBY / RECEPTION /FRONT OFFICE



White

LYITH-11L
Double layer guest room bucket (stripe embossed)
RUBBISH BARREL
SIZE:(Φ)225X(H)270(10L)
(Φ)245X(H)300(14L)

	Model No.	Finshed			
	LYITH-68E				



black

LYITH-68E
Painted oval double-layer guest room bucket
RUBBSH BARREL
S1ZE:260(L)X200(W)X270(H)

	Model No.	Finshed			
	LYITH-C25B				



Black paint

LYITH-C25B
Egg-shaped interior and exterior room trash can
RUBBISH BARREL
SIZE:(L)260X(W)190X(H)270

	Model No.	Finshed			
	LYITH-C25A				



Stainless steel

LYITH-C25A
Oval single layer guest room barrel
RUBBISH BARREL
SIZE:(L)260X(W)190X(H)270

	Model No.	Finshed			
	LYITH-C16				



LYITH-C16
Double layer guest room barrel
ROOM RUBBISH BARREL
SIZE:(Φ)225X(H)270
(Φ)245X(H)300

LOBBY / RECEPTION /FRONT OFFICE

	Model No.	Finshed			
	LYITH-C15				



LYITH-C15
Single layer guest room bucket
ROOM RUBBISH BARREL
SIZE:(Φ)225X(H)270
(Φ)200X(H)300
(Φ)245X(H)300



Titanium gold 3210345 3210343 3210344 3210346

polishes 3210145 3210143 3210144 3210146





Deluxe waste bin

-Steel material double layer removable innerbin
plastic rust-proofing







	3330341	3330343	3330310
Titanium gold			
polishes	3330141	3330143	3330110

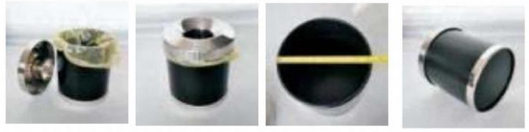

Deluxe waste bin

-Steel material stainless steel top and bottomring
fire-proof easy clean-up,longevity



	Model No.	Finshed			
	3220103				



3220103
Pedal trash can (3 liters, 5 liters)
GROUND ASH BARREL
SS polished with soft close

	Model No.	Finshed			
	LYITH-G105				



LYITH-G105
Pedal trash can (5 liters, 8 liters, 12 liters)
GROUND ASH BARREL
SIZE:(Φ)205x(H)285(5L)
SIZE:(Φ)240x(H)335(8L)

	Model No.	Finshed			

LYITH-80
(L)240*(W)140*(H)310)(7L)
LYITH-81
(L)240*(W)140*(H)380)(10L)
LYITH-82
(L)270*(W)180*(H)380)(15L)
LYITH-83
(L)270*(W)180*(H)450)(18L)
Long pedal trash can
RUBBISH BARREL



	Model No.	Finshed			



LYITH-80B
(L240*(W)140*(H)310)(7L/steel)
LYITH-81B
(L240*(W)140*(H)380)(10L/steel)
LYITH-82B
(L)270*(W)180*(H)380)(15L/steel)
LYITH-83B
(L)270*(W)180*(H)450)(18L/steel)
Long pedal trash can
RUBBISH BARREL

LOBBY / RECEPTION /FRONT OFFICE

	Model No.	Finshed			
	LYITH-C20A				



Stainless steel

LYITH-C20A
Round swing lid room trash can
RUBBISH BARREL
SIZE:(Φ)200*(H)300

	Model No.	Finshed			
	LYITH-C20				



Paint

LYITH-C20
Round swing lid room trash can
RUBBISH BARREL
SIZE:(Φ)245*(H)300



LPX-205A-1 LPX-205A-2 LPX-205A-3





Round guestroom bin
-Size: ¢ 205X295Hmm

