

	Model No.	Finshed			kg
Titanium gold	2202313	Titanium gold	350		11.5
Polishes	2202111	Polishes	350		11.5
Brushed	2202212	Brushed	350		11.5

Stanchion post

-polished stainless steel construction with “Leg”design
-350mm round base
-Size: ¢ 350*920Hmm

Hooks Dia optional in: ¢ 32mm, ¢ 38mm
Hooks finish optional in:polished brushed and gold;
Rope color optional in:red,blue,balck,brown
Length optionalin:1.5m,2.0m and 2.5m

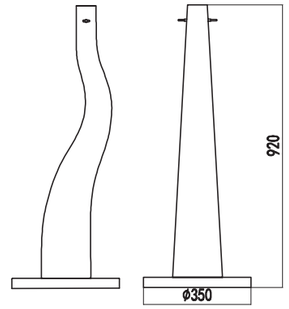



	Model No.	Finshed		kg	
Titanium gold	2280313	Titanium gold	50		
Polishes	2280111	Polishes	50		
Brushed	2280212	Brushed	50		

Stanchion post in ground

-Polished stainless steel construction
-with sleeve
-with out base





LaiCozy
Hotel Furniture And Equipment



Model No.:#2432
Post-top sign
Material: S/S in
brushed finished
Size:220x62x460Hmm



Retractable
belt stanchion

- Quick delivery
- Competitive price
- Calibrated belt
- S/S in brushed

Red

Black

#2447214
Size:300x900Hmm

LaiCozy
Hotel Furniture And Equipment



Model No.:#2432B
Post-top sign
Material: S/S in
brushed finished
Size:220x62x460Hmm



Retractable
belt stanchion

- Quick delivery
- Competitive price
- Calibrated belt
- S/S in brushed

#2447414
Size:300x900Hmm

LOBBY / RECEPTION
/FRONT OFFICE

LaiCozy
Hotel Furniture And Equipment



	Red	Blue	Yellow	Black	Green	Gray
Titanium gold	2423311	2423312	2423313	2423315	2423314	2423319
Polishes	2423111	2423112	2423113	2423115	2423114	2423119
Brushed	2423211	2423212	2423213	2423215	2423214	2423219
Black	2423411	2423412	2423413	2423415	2423414	2422419





Retractable post

-73mm Aluminum tube in polished finish
-With 2m retractable belt in red color
-360 taper base
Size: ¢ 360*1040(H)mm
Belt length are availablel in 3m
Red,blue,yellow,green,gray and black

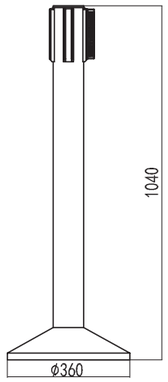



	Red	Blue	Yellow	Black	Green	Gray
Titanium gold	2446311	2446312	2446313	2446315	2446314	2446319
Polishes	2446111	2446112	2446113	2446115	2446114	2446119
Brushed	2446211	2446212	2446213	2446215	2446214	2446219
Black	2446411	2446412	2446413	2446415	2446414	2446419





Retractable post

S/S Retractable post,
ø50mm SS tube with SS head together,
brushed finish,
with ø300mm 5.4kgs flat base,
2.0m long black belt(optional),
Size:Size:ø300*935Hmm

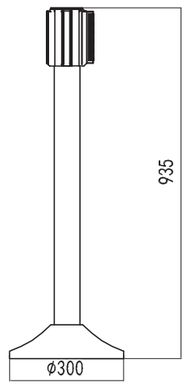

LaiCozy
Hotel Furniture And Equipment

LOBBY / RECEPTION /FRONT OFFICE

	Red	Blue	Yellow	Black	Green	Gray
Titanium gold	2445311	2445312	2445313	2445315	2445314	2445319
Polishes	2445111	2445112	2445113	2445115	2445114	2445119
Brushed	2445211	2445212	2445213	2445215	2445214	2445219
Black	244541	2445412	2445413	2445415	2445414	2445419

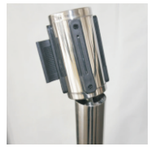

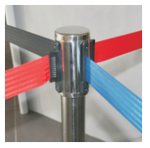

Retractable post

-50mm stainless steel tube in polished finish
- ¢ 63mm stainless steel removable belt head
-With 2m retractable belt in red color
-320 taper base
Size: ¢ 320*985(H)mm
Belt length are availablel in 3m
Red,blue,yellow,green,gray and black

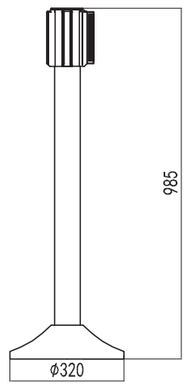



	Red	Blue	Yellow	Black	Green	Gray
Titanium gold	2432311	2432312	2432313	2432315	2432314	2432319
Polishes	2432111	2432112	2432113	2432115	2432114	2432119
Brushed	2432211	2432212	2432213	2432215	2432214	2432219
Black	2432411	2432412	2432413	2432415	2432414	2432419





Retractable post

-63mm stainless steel tube in polished finish
-With 2m retractable belt in red color
-350 flat base
Size: ¢ 350*935(H)mm
Red,blue,yellow,green,gray and black

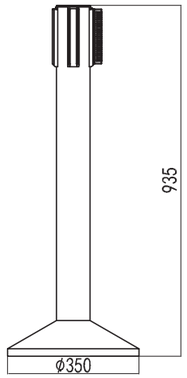



LaiCozy
Hotel Furniture And Equipment



	Red	Blue	Yellow	Black	Green	Gray
Titanium gold	2434311	2434312	2434313	2434315	2434314	2434319
Polishes	2434111	2434112	2434113	2434115	2434114	2434119
Brushed	2434211	2434212	2434213	2434215	2434214	2434219
Black	2434411	2434412	2434413	2434415	2434414	2434419





Retractable post

-73mm Aluminum tube in polished finish
-With 2m retractable belt in red color
-360 taper base
Size: ¢ 360*1040(H)mm
Belt length are availablel in 3m
Red,blue,yellow,green,gray and black

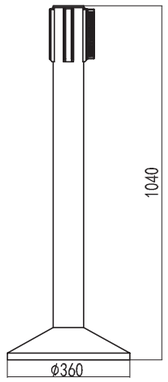



	Red	Blue	Yellow	Black	Green	Gray
Titanium gold	2445311	2445312	2445313	2445315	2445314	2445319
Polishes	2445111	2445112	2445113	2445115	2445114	2445119
Brushed	2445211	2445212	2445213	2445215	2445214	2445219
Black	2445411	2445412	2445413	2445415	2445414	2445419

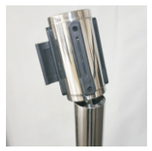



Retractable post

-50mm stainless steel tube in polished finish
-With 2m retractable belt in red color
-350 flat base
Size: ¢ 350*935(H)mm
Red,blue,yellow,green,gray and black

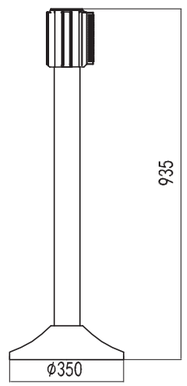

LaiCozy
Hotel Furniture And Equipment

	Red	Blue	Yellow	Black	Green	Gray
Titanium gold	2443311	2443312	2443313	2443315	2443314	2443319
Polishes	2443111	2443112	2443113	2443115	2443114	2443119
Brushed	2443211	2443212	2443213	2443215	2443214	2443219
Black	2443411	2443412	2443413	2443415	2443414	2443419





Retractable post

S/S Retractable post,
ø63mm SS tube,brushed finish,
flat final, with ø360mm 8.0kgs flat base,
2.0m long red belt(optional),
Size:ø360*955Hmm

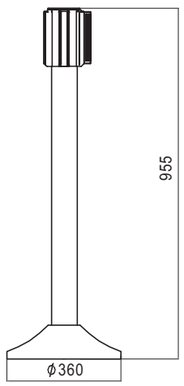







#2422 Belt head
Belt color are optional
in page 21



Model:2622
Size:80*63*120Hmm



#2301
Wall hooks
Available in gold #2303

LaiCozy
Hotel Furniture And Equipment



	Model No.	Finshed	⟷	⟷	kg
Titanium gold	2221313	Titanium gold	320	50	7.6
Polishes	2221111	Polishes	320	50	7.6
Brushed	2221212	Brushed	320	50	7.6
Black	2221412	black paint	320	50	7.6



Stanchion post

-Tilanium gold finish construction
-Zylinder final
-320mm taper base
-Size: ¢ 320*940H)mm

Hooks Dia optional in: ¢ 32mm, ¢ 38mm
Hooks finish optional in:polished
brushed and gold;
Rope color optional in:red,blue,balck,brown
Length optionalin:1.5m,2.0m and 2.5m

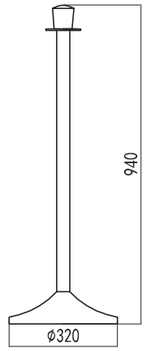

	Model No.	Finshed	⟷	⟷	kg
Titanium gold	2234313	Titanium gold	350	50	10.7
Polishes	2234111	Polishes	350	50	10.7
Brushed	2234212	Brushed	350	50	10.7
Black	2234412	black paint	350	50	10.7

Stanchion post

-Polished stainless steel construction
-Flat final
-U style 350mm flat base
-Size: ¢ 350*890(H)mm

Hooks Dia optional in: ¢ 32mm, ¢ 38mm
Hooks finish optional in:polished
brushed and gold;
Rope color optional in:red,blue,balck,brown
Length optionalin:1.5m,2.0m and 2.5m

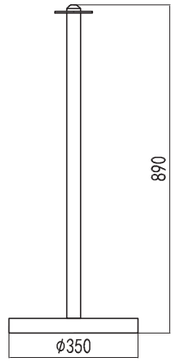

LaiCozy
Hotel Furniture And Equipment

LOBBY / RECEPTION /FRONT OFFICE





	Model No.	Finshed	⟷	⟷	kg
Titanium gold	2211313	Titanium gold	320	50	7.6
Polishes	2211111	Polishes	320	50	7.6
Brushed	2211212	Brushed	320	50	7.6
Black	2211412	black paint	320	50	7.6



Stanchion post

-Polished stainless steel construction
-Ball final
-320mm taper base
-Size: ¢ 320*987(H)mm

Hooks Dia optional in: ¢ 32mm, ¢ 38mm
Hooks finish optional in:polished
brushed and gold;
Rope color optional in:red,blue,balck,brown
Length optionalin:1.5m,2.0m and 2.5m

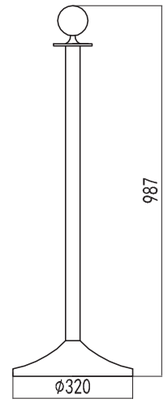

	Model No.	Finshed	⟷	⟷	kg
Titanium gold	2286313	Titanium gold	360	50	10
Polishes	2286111	Polishes	360	50	10
Brushed	2286212	Brushed	360	50	10
Black	2286412	black paint	360	50	10



Stanchion post

-Polished stainless steel construction
-Drum final
-360mm flat base
-Size: ¢ 360*960(H)mm

Hooks Dia optional in: ¢ 32mm, ¢ 38mm
Hooks finish optional in:polished
brushed and gold;
Rope color optional in:red,blue,balck,brown
Length optionalin:1.5m,2.0m and 2.5m

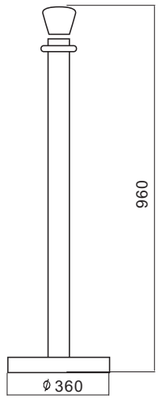



LaiCozy Hotel Furniture And Equipment

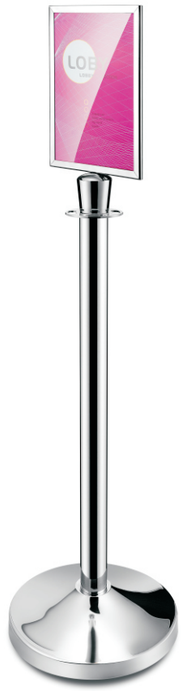

A4

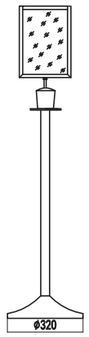



	A4	A3	A4	A3
Titanium gold	2203	2205	2203-1	2205-1
Polishes	2201	2204	2201-1	2204-1
Brushed	2202	2206	2202-1	2206-1

A3

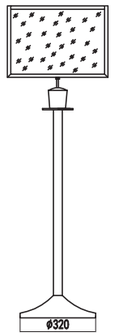



	A4	A3	A4	A3
Titanium gold	2603	2605	2603-1	2605-1
Polishes	2601	2604	2601-1	2604-1
Brushed	2602	2606	2602-1	2606-1



	Model No.	Finshed			kg
	2215	polished	320	50	7.6





Barrier banner

Size:1400X800(mm)
Fabric color are opional in:
Black,red,blue and green



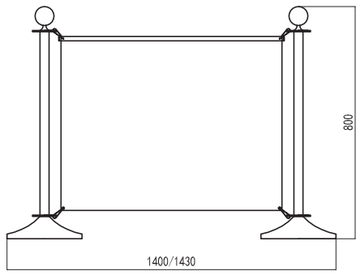

LaiCozy Hotel Furniture And Equipment

LOBBY / RECEPTION /FRONT OFFICE

	Red	Blue	Gold	Black	Mix
Titanium gold	2323121	2323122	2323123	2323125	2323128
Polishes	2321121	2321122	2321123	2321125	2321128
Brushed	2322121	2322122	2322123	2322125	2322128

Design your Poly rope

-Dia opitonal in: ¢32mm, ¢38mm;
-Hooks finish optional in:polished, brushed and gold;
-Rope color optional in:red,blue,gold, black,brown
-Length optional in:1.5m,2.0m,2.5m.



	Red	Blue	Black	Fresh red
Titanium gold	2323111	2323112	2323115	2323116
Polishes	2321111	2321112	2321115	2321116
Brushed	2322111	2322112	2322115	2322116

Design your Velour rope

-Dia opitonal in: ¢32mm, ¢38mm;
-Hooks finish optional in:polished, brushed and gold;
-Rope color optional in:red,blue,fresh red, black,brown
-Length optional in:1.5m,2.0m,2.5m.



LaiCozy
Hotel Furniture And Equipment

	Model No.	Finshed			
	2141999	Hammerstone			

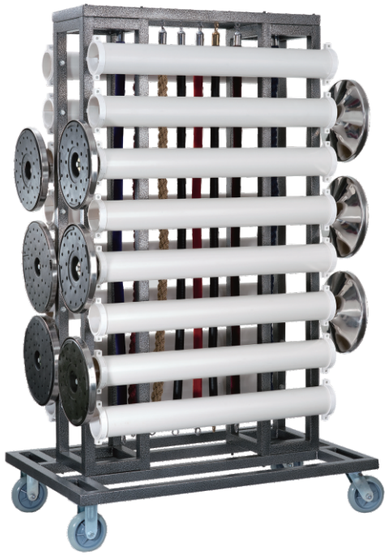



Post trolley

-Knocked down design
-Easy for transport and stock
-Hammerstone finish
With PVC piles
Size:1125X800X1930(H)mm

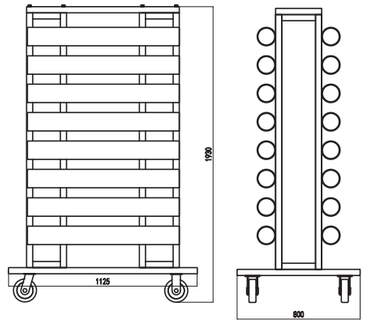

	A4	A3	A4	A3
Titanium gold	2403	2405	2403-1	2405-1
Polishes	2401	2404	2401-1	2404-1
Brushed	2402	2406	2402-1	2406-1

Polished stainless steel sign



A4



A3

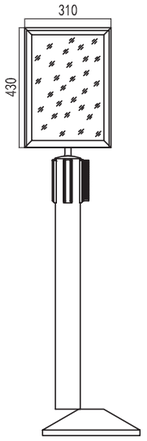

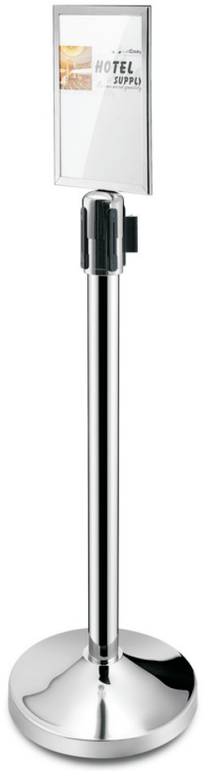

	Model No.	Finshed			
	2140999	Hammerstone			

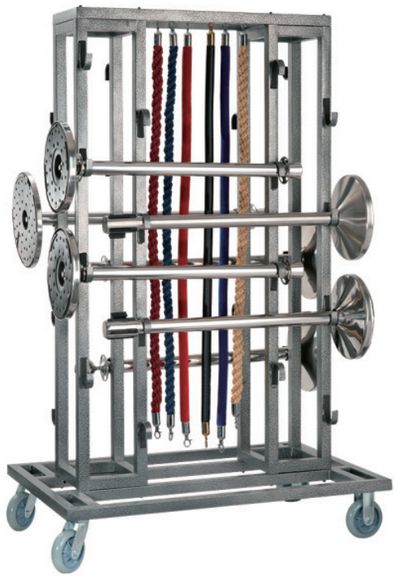



Post trolley

-Knocked down desing.
-Easy for transport and stock
-Hammerstone finish
Size:1125X800X1930(H)mm

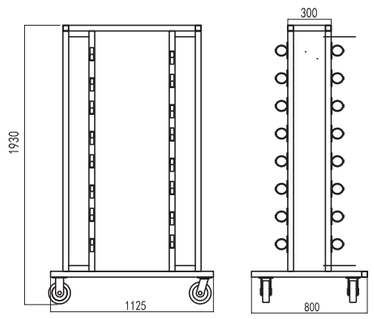

	A4	A3	A4	A3
Titanium gold	2413	2415	2413-1	2415-1
Polishes	2411	2414	2411-1	2414-1
Brushed	2412	2416	2412-1	2416-1
Black	2444	2446	2444-1	2446-1



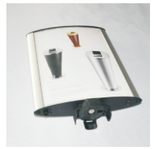



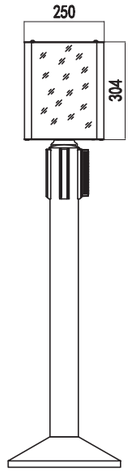

Sign for retractable post

Aluminium frame with
stainless steel holder
Size:250*50*380(H)mm



LaiCozy
Hotel Furniture And Equipment



	Model No.	Finshed			kg
	LK-1204		345	70	10

Advisement player

-LED Hd display panel.
-1920X1080 Hd video decoding.
-4G memory.
-Display size:941(H)X529(V)mm
-USB/SD
-220V50/60HZ,150W
-over size:1815X633X60mm



	Model No.	Finshed			kg
	3021090-1		345	70	10



Sign board

-Stainless steel,polished finish
Size:450X330X1235(H)mm

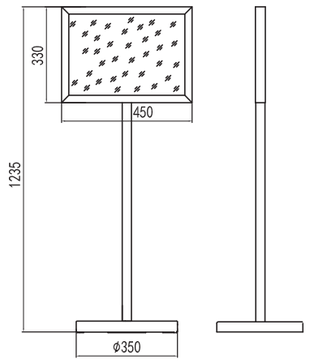

LaiCozy
Hotel Furniture And Equipment

	Model No.	Finshed			
	3021090	Polish			



Sign board

-Stainless steel,polished finish
Size:430X310X1100(H)mm

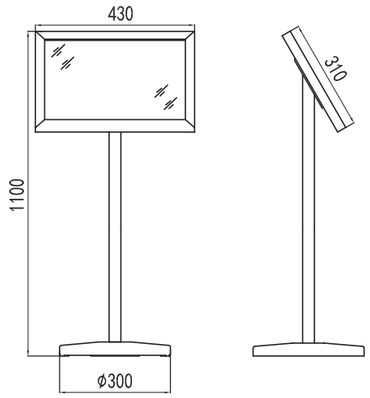



Firma GL

	Model No.	Finshed			kg
	3021091		345	70	10



Sign board

-Stainless steel,polished finish
Size:500X659X1200(H)mm

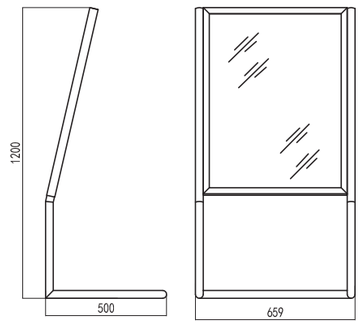



LaiCozy
Hotel Furniture And Equipment



	Model No.	Finshed			kg
	3021092				



Feature:

*A3/A4 sign
*Acrylic holder
*SS base with weight
* Weight: 6.9KG
*Base size: 30*30CM
*Height: 120cm



	Model No.	Finshed			kg
	3021092-1				



Feature:

*A3/A4 sign
*Acrylic holder
*SS base with weight
* Weight: 6.9KG
*Base size: 30*30CM
*Height: 120cm

DIY YOUR POST

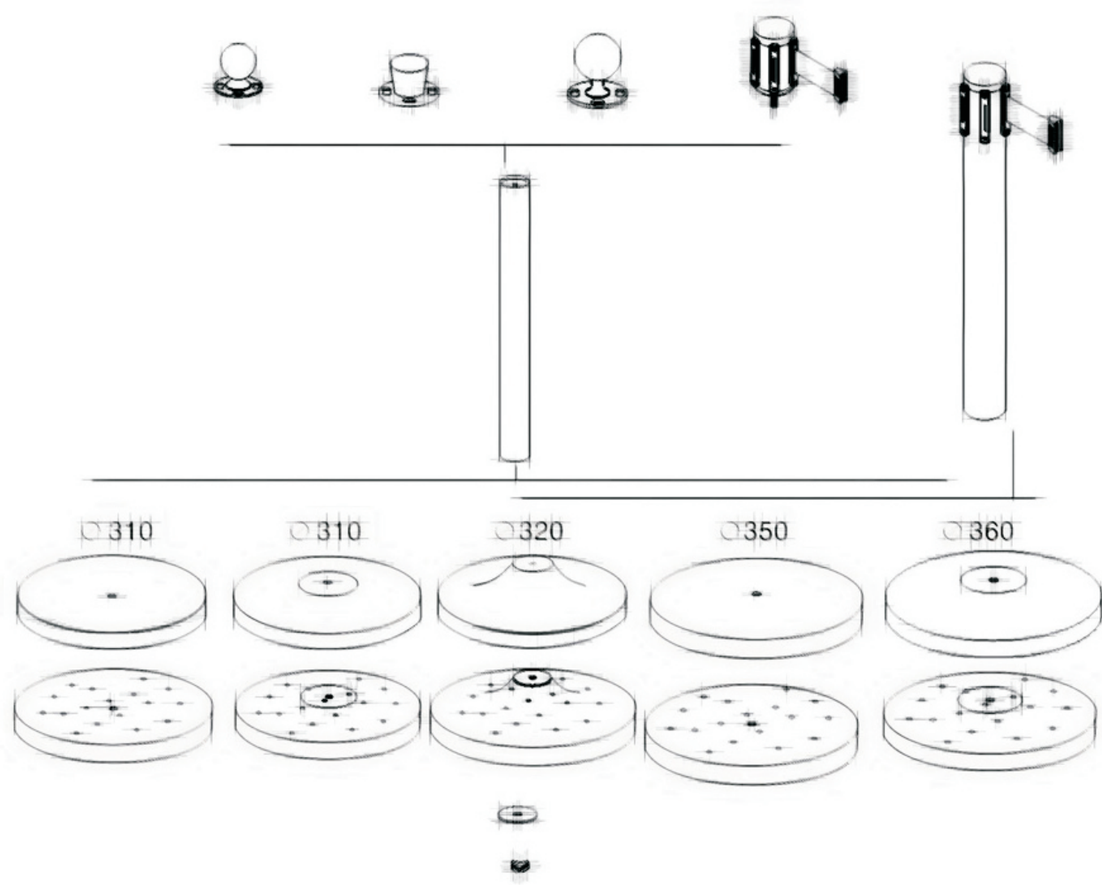

All of our posts are knockdowned design